HMES.STEERWORLD.COM

STEER A NEW WORLD

INSTALLATIONS OF STEER EXTRUDERS & EPZ PRODUCTS / SERVICES SPANNING OVER 35 COUNTRIES

BANGALADESH | BELARUS | BELGIUM | BRAZIL | CANADA | CHINA | FRANCE | GERMANY | HOLLAND | INDIA
INDONESIA | ISRAEL | ITALY | JAPAN | KINGDOM OF SOUDI ARABIA | SOUTH KOREA | MALATSIA | MEXICO
NEPAL | NEW ZEALAND | NIGERIA | PAKISTAN | POLAND | RUSSIA | SCOTLAND | SINGPORE | SLOVENIA
SOUTH AFRICA | SPAIN | SYRIA | TAIWAN | THAILAND | TURKEY | UAE | UKRAINE | UK | USA

STEER

• USA • EUROPE • JAPAN • CHINA • INDIA

WWW.STEERWORLD.COM

STEER

HMES

hot melt extrusion system

FOR PHARMACEUTICAL APPLICATIONS

S T E E R A N E W W O R L D

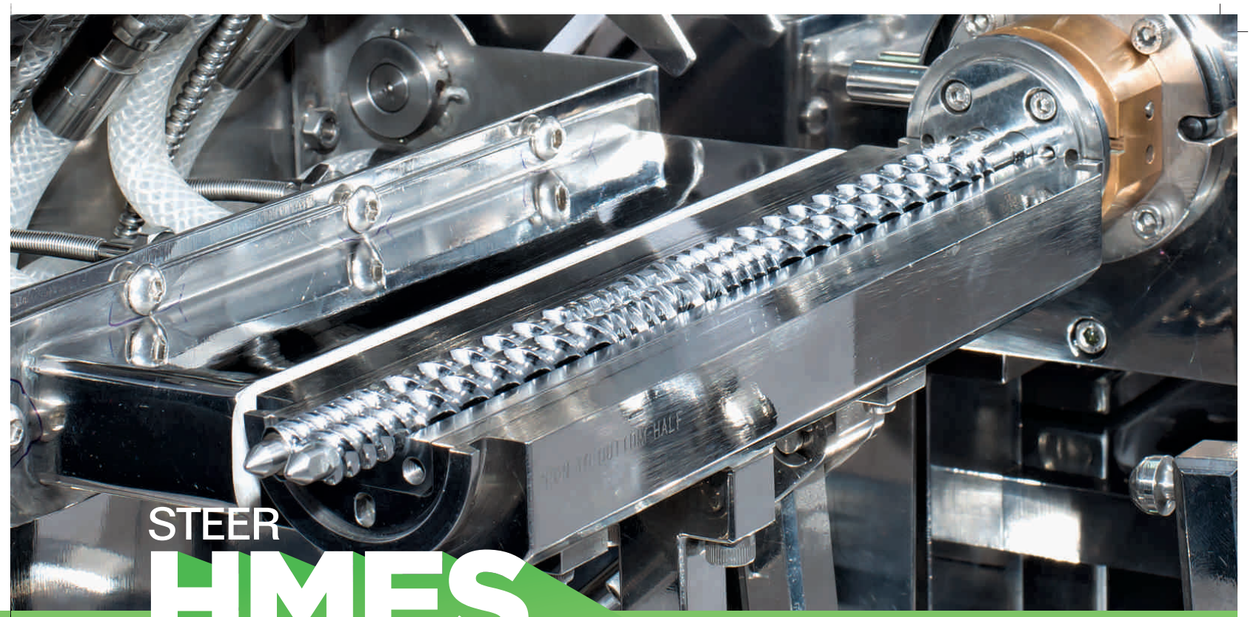

STEER

H.M.E.S.

hot melt extrusion system

FOR PHARMACEUTICAL APPLICATIONS

Hot Melt Extrusion [HME] has emerged as a novel processing technology in developing molecular dispersions of Active Pharmaceutical Ingredients [APIs] into various polymer and lipid matrices. Currently, this technique is extensively used in pharmaceutical research and development for time controlled, modified, extended, and targeted drug delivery

- MODULAR
- COMPREHENSIVE
- SCALABLE

CONTENTS

01 SECTION 1 - **STEER H.M.E.S - AN OVERVIEW**

10 SECTION 2 - **STEER H.M.E.S - OMICRON**

18 SECTION 3 - **STEER H.M.E.S - OMEGA**

26 SECTION 4 - **CHILL ROLLER**

INSERTS

- ANNEXURE
- HME SPECIFICATIONS
- STEER PHARMA SERVICES & RESOUORCES

W STEERWORLD.COM

E INFO@STEERWORLD.COM

STEER

H.M.E.S

hot melt extrusion system

FOR PHARMACEUTICAL APPLICATIONS

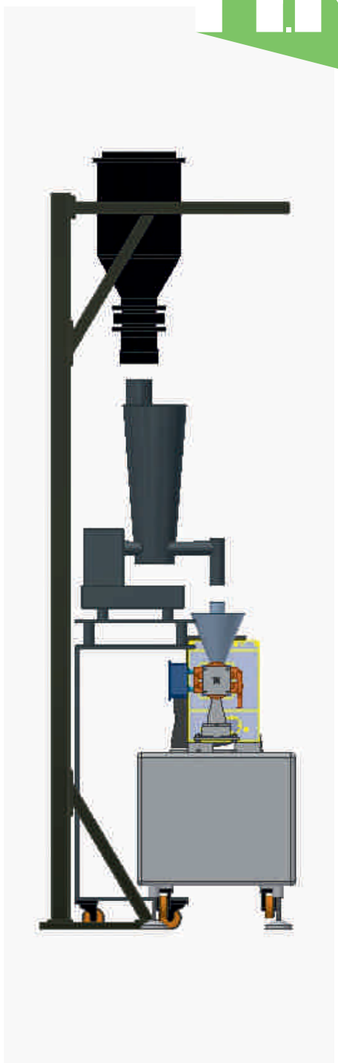

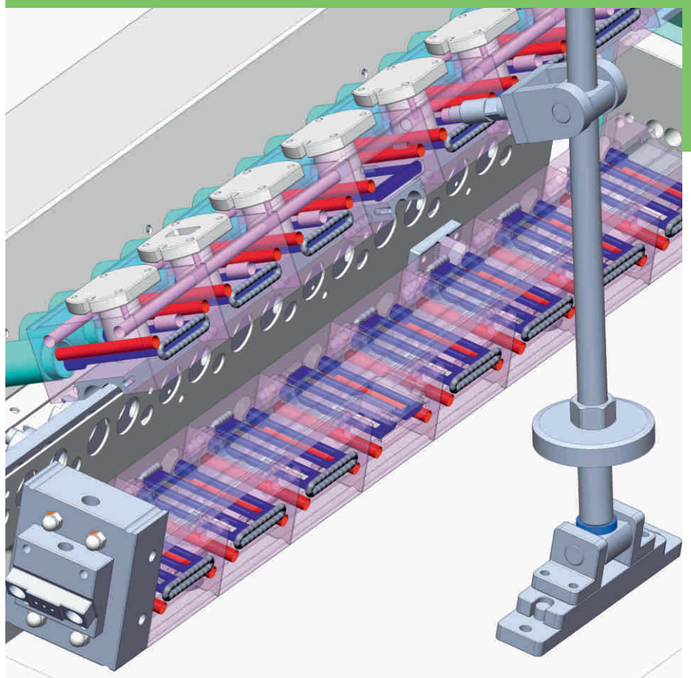

Applications

Hot Melt Extrusion Formulations,
Research & Development,
Solid Molecular Dispersions,
Bio-availability Enhancement,
Taste Masking &
Sustained Release.

STEER H.M.E.S is a complete system with its core unit 'Hot Melt Extruder' having the STEER EPZ products like Screw Elements & Barrels; integrated appropriately with both up-stream and down-stream components like Micro Feeder, Split and Side Feeder, Refill Silo, Associated Platform, Chill Roll Unit, Chill Air Conveyor Unit, Pelletizer and Flaker. The system is modular, comprehensive and scalable.

S T E E R A N E W W O R L D

Pharmaceutical Compounding using Hot Melt Extrusion (HME) involves achieving a homogenous solid dispersion or solution by mixing and/or melting API with one or more recipients such as polymers, lipids, surfactants, diluents, lubricants, glidants, plasticizers and other modifiers for the purpose of stabilization, bioavailability enhancement, controlled release or taste masking and improved delivery especially in oral and trans-dermal systems.

- Dr. Babu Padmanabhan

Established by Dr. Babu Padmanabhan PhD [www.drbabupadmanabhan.com] in the year 1993 with a mission to achieve ascendancy in technology and new material development. STEER has grown since then to be a globally acknowledged leader in the self cleaning twin screw process technology catering to the pharmaceutical, plastic & food industry. STEER fulfills customer needs through its generation-next extruders that are well known for their 'varied applications, craftsmanship and engineering'. It is one of the most vertically integrated manufacturing company in the extruder industry.

STEER's Twin-Screw Extruders offer the best feeding ability, greatest energy efficiency and highest torque capability. STEER's Hot Melt Extrusion product offerings have occupied an enviable market position in the global pharmaceutical industry.

P

Research & Development

STEER H.M.E.S. omicron 10 P
FOR PHARMACEUTICAL R&D LAB

STEER H.M.E.S. omicron 12 P
FOR PHARMACEUTICAL R&D LAB & PILOT PRODUCTION

Pilot & Full Scale Production

STEER H.M.E.S. omega 20 P
FOR PHARMACEUTICAL PILOT PRODUCTION

STEER H.M.E.S. omega 30 P
FOR PHARMACEUTICAL REGULAR PRODUCTION

STEER H.M.E.S. omega 40 P
FOR PHARMACEUTICAL REGULAR PRODUCTION

STEER H.M.E.S.

hot melt extrusion system

FOR PHARMACEUTICAL APPLICATIONS

STEER manufactures HME extruders in sizes ranging from 10mm, with the capability to run feed rates as low as 10-15 grams per batch, to 70mm models with the capability to run rates as high as 250-300 kg/hr. All extruders are **cGMP** compliant. STEER is the only supplier in the industry to offer all extruders in both clam shell and segmented barrel configurations. All STEER pharma extruders are scalable making it possible to accurately translate R&D projects to a manufacturing scale, or reproduce a manufacturing process on an R&D scale extruder. STEER also provides ancillary HME equipment to the industry such as chill roll units, cooling belts, flakers, pelletizers, etc

STEER H.M.E.S.

Pharmaceutical Research & Development

STEER H.M.E.S. omicron 10 P
FOR PHARMACEUTICAL R&D LAB

R & D LAB

STEER HMES OMICRON 10 [MINI] offers the best platform for Universities and Pharmaceutical Companies doing hard core research on hot melt extrusion on NCE and/or applications requiring high potent API. OMICRON 10 is designed to handle very low volumes. The option of changing process section with four different Do/Di (1.27, 1.42, 1.55, 1.71) ratios to vary the shear rate makes OMICRON 10 the best extruder platform for pharmaceutical research.

STEER H.M.E.S. omicron 12 P
FOR PHARMACEUTICAL R&D LAB & PILOT PRODUCTION

R & D LAB AND PILOT PRODUCTION

STEER HMES OMICRON 12 is an excellent extruder for conducting feasibility / proof of concept studies in pharmaceutical research. With micro feeder and combinational downstream ancillaries, OMICRON 12 is a complete solution for scale up studies for the drug development. OMICRON 12 is well-known to process most of the excipients used in pharma research.

Pilot and Full-scale Production

STEER H.M.E.S. omega 20 P
FOR PHARMACEUTICAL PILOT PRODUCTION

R & D LAB AND PILOT SCALE PRODUCTION EXTRUDERS

For Scale-up studies, Exhibit / Clinical batches, STEER HMES OMEGA 20 is the most suitable pilot scale extruder. OMEGA 20 is designed to comply with GMP requirements of automation, contact surface and cleaning.

STEER H.M.E.S. omega 30 P
FOR PHARMACEUTICAL REGULAR PRODUCTION

FULL SCALE PRODUCTION EXTRUDERS

STEER provides production scale HMES ranging from OMEGA 30, 40 and upto 70mm. STEER production scale extruders are manufactured to achieve high level of efficiently in throughput and crafted to offer ease of use and low downtime during product change over. High torque gear box, precise control over process parameters, ease of cleaning and validation are some of the key features of STEER's full scale production extruders.

- MODULAR
- COMPREHENSIVE
- SCALABLE

STEER

HMES

advantage STEER

STEER HAS PROVEN RECORD OF HAVING INSTALLED SEVERAL HME SYSTEMS GLOBALLY

KEY ADVANTAGES OF STEER HMES

- Assured melt quality
- Better mixing capability
- Easy cleaning
- Clamshell and segmented barrel design
- Precise control of process parameters
- Shorter residence time
- Continuous process
- Integration with PAT tools
- Audit trails
- Processing of temperature sensitive actives
- STEER patented elements for pharmaceutical materials
- The rewarding customer services through its dedicated STEER PSR division

STEER shafts are made with superior metallurgy from our very own state-of-the-art foundry, with full-fledged in-house treatment. Besides they are diligently designed and made with high accuracy. At STEER, we have the ability to machine any contour for up to 5.5m . Our in-house torque testing facility helps rate the capacity of these shafts.

/ MODULAR
/ COMPREHENSIVE
/ SCALABLE

STEER Barrels are technologically advanced masterpieces, designed to deliver outstanding value. Made with the right metallurgy at our very own state-of-the-art foundry, they are crafted for high performance, longer life and perfectly match with your existing co-rotating twin-screw extruder machinery.

STEER EPZ PRODUCTS

STEER is a pioneer and global leader in EPZ products like Screw-elements, Shafts, Barrels.

STEER offers special screw elements (patented) to provide unique solutions for low bulk density powders, highly viscous melt, temperature sensitive API's, high drug load formulations.

FOR HIGHER INTAKE
STEER SFV ELEMENTS

FOR HIGHER INTAKE (SPECIAL)
STEER RFV ELEMENTS

FOR ENHANCED MIXING
STEER FKB ELEMENTS

FOR EFFICIENT MELTING
STEER FME ELEMENTS

STEER PSR pharma services & resources

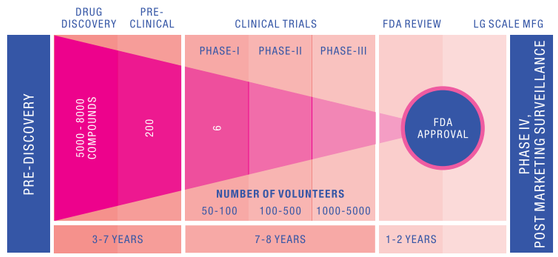

STEERLife is a part of the STEER Group. Founded in 1993 by Dr. Babu Padmanabhan, the STEER Group is committed to the design, creation and implementation of advanced materials platform technologies that effectively transform and functionalise materials in the field of pharmaceuticals, plastics, food & nutraceuticals, biomaterials and biorefining. Operating 5 global offices, 10 satellite offices, 3 Application Development Centers and supported by a talented workforce of over 500 engineers, scientists and technicians, the STEER Group serves over 39 countries across the globe. STEER is driven by innovation and holds 11 patents along with 25 others that have been applied for. With a vision to 'STEER A NEW WORLD', the group remains focused on the development of advanced platform technologies and processes to improve the quality of life and change the way people live, eat and stay healthy.

W HMES.STEERWORLD.COM
E HMES@STEERWORLD.COM

STEER

H.M.E.S.

pharma research & development

STEER H.M.E.S. omicron 10 P

FOR PHARMACEUTICAL R&D LAB

STEER H.M.E.S. omicron 12 P

FOR PHARMACEUTICAL R&D LAB & PILOT PRODUCTION

STEER HMES

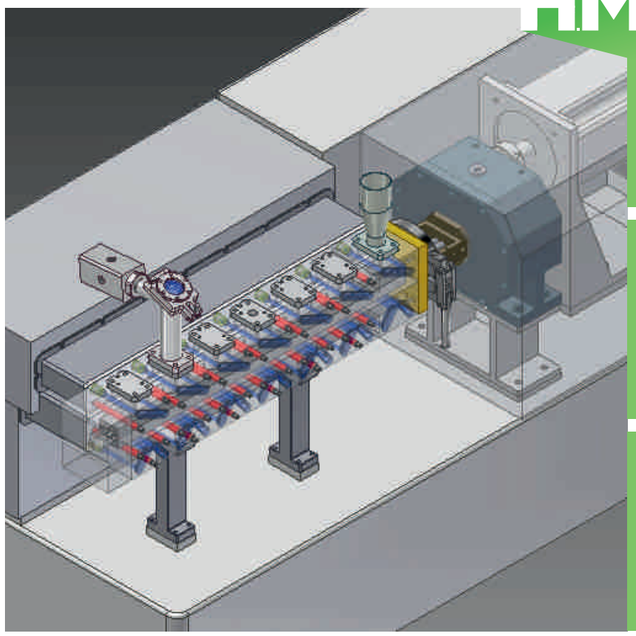

omicron 10 P

STEER HMES OMICRON 10 [MINI] offers the best platform for Universities and Pharmaceutical Companies doing hard core research on hot melt extrusion on NCE and/or applications requiring high potent API. OMICRON 10 is designed to handle very low volumes with the option of changing process section with four different Do/Di (1.27, 1.42, 1.55, 1.71) ratios to vary the shear rate makes OMICRON 10 the best extruder platform for pharmaceutical research.

omicron 12 P

STEER HMES OMICRON 12 is an excellent extruder for conducting feasibility / proof of concept studies in pharmaceutical research. With micro feeder and combinational downstream ancillaries OM 12 is a complete solution for scale up studies for the drug development. OM 12 is well-known to process most of the excipients used in Pharma research.

applications

- Bioavailability enhancement
- Sustained or controlled release
- Taste masking
- Potent compounds (oncology, narcotics) processing - dust reduction
- Stabilizing moisture sensitive drugs
- Solvent free processing
- Content uniformity for very low dose drugs

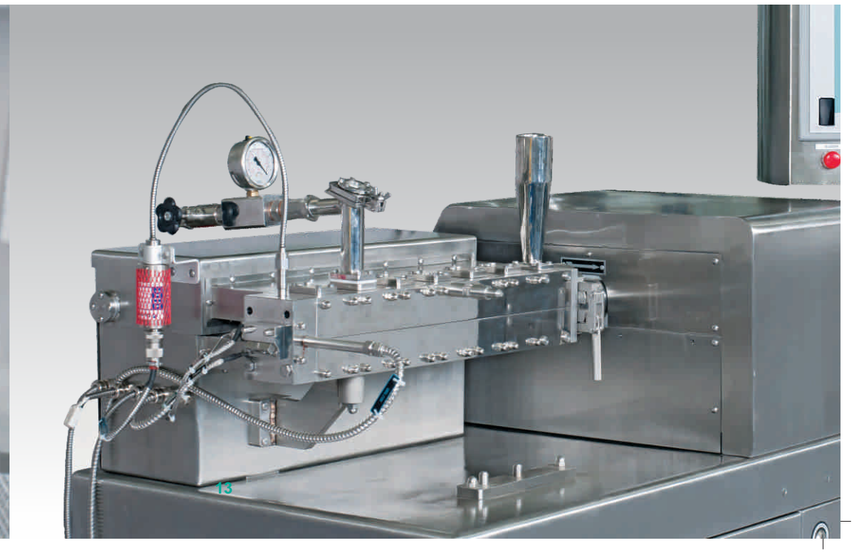

STEER H.M.E.S.

pharmaceutical research & development

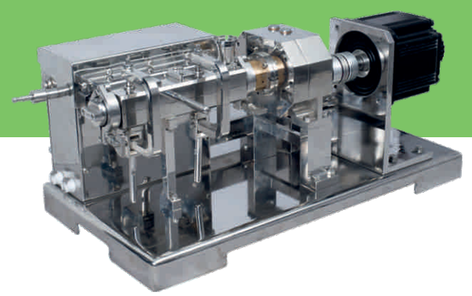

STEER H.M.E.S. omicron 10 P

FOR PHARMACEUTICAL R&D LAB

pharma twin-screw extruders

The OMICRON 10 Mini is the pharmaceutical industries smallest scalable extruder for HME development. The design and utility of the OMICRON 10 Mini makes it the most versatile and user friendly platform for low volume HME applications. Features which include tight tolerances, eliminated dead space, and low inventory die head make it ideal for the development of pharmaceutical applications requiring costly excipients and high potency API's.

STEER GENERATION NEXT
CO-ROTATING TWIN-SCREW EXTRUDERS

functional FEATURES

- Originally developed to support the growth of pharmaceutical research utilizing PLGA, a costly excipient approved by the FDA for oral and parenteral sustained release applications
- Small footprint of only 650L x 350W x 300H and less than 45kg, the extruder easily fits on a laboratory bench for portability and flexibility of use
- Effective in handling small batch quantities -10g to 15g
- Novel design features eliminate the need for complex procedures to clean and maintain the extruder
- All service components are easily disassembled and reassembled manually without the use of special tools
- Unlike other HME "micro" extruders rated at similar throughput rates, the OMICRON 10 MINI is truly scalable to larger HME extruders

mechanical FEATURES

- The drive motor is directly coupled to the gearbox eliminating the need for a drive belt
- Easy to use Tri-Clover Clamps are used to join the barrel assembly to the gearbox, and to attach the die head to the extruder barrel assembly
- Through the use of Tri-Clover Clamps the barrel assembly can easily be removed in minutes
- The barrel liner can be removed from the barrel housing for inspection, cleaning, or replacement
- Screw shafts are quickly and easily removed and installed through the use of a "cross pin". By simply pulling (retracting) the cross pin from the coupling housing the shafts can easily be extracted, and shafts are reinstalled by simply inserting them into the coupling housing and pushing (inserting) the cross pin into the housing
- Cooling lines have quick connect fittings to facilitate barrel removal, and feature FDA approved hose construction
- The one piece machined screw shaft (not segmented) are custom designed to conform to the profiles required for specific customer applications (STEER can assist customers with design support at no cost)
- The OMICRON 10 MINI is compatible with all small scale STEER ancillary components such as pelletizers, cooling belts, chill rolls (smallest in the Pharma industry), etc

design FEATURES

- Clamshell design enables quick access to the process section for disassembly and cleaning, as well as enabling rapid inspection of the process section during hot melt extrusion to support process technology development (R&D)
- The barrel liner is easily removed without the use of tools to facilitate quick disassembly, cleaning and reassembly. The two halves of the clam shell barrel are rigidly clamped together by toggle clamp system
- Screws are also easily removed for cleaning and inspection by simply retracting a cross pin
- One piece machined screws shaft (vs.multi-piece segmented screws) eliminate the opportunity for cross contamination from active ingredients becoming trapped between segmented screw elements where they can later re-enter the process section, this is a particularly important feature for processing HPAPI's
- The material of construction for the shafts and barrel liner is of Surgical Stainless Steel. All exposed contact surfaces are of SS316L including the gearbox housing. There are four heating/cooling temperature control zones. All zones have water cooling, both upper and lower barrel sections are water cooled as opposed to many small pharma extruders in which only partial barrel sections are water cooled or that utilize air cooling
- The OMICRON 10 MINI has multiple dry feeding ports and liquid injections ports. There are vacuum and atmospheric venting options. The HMI can be mounted remotely to support the isolation of the extruder within a controlled environment, or it can be attached to the extruder for local operation. The HMI is easily removed from the extruder to enable aqueous cleaning of the entire equipment in situ without the presence of the control module

STEER H.M.E.S.

pharmaceutical research & development and pilot production

STEER H.M.E.S. omicron 12 P
FOR PHARMACEUTICAL R&D LAB & PILOT PRODUCTION

pharma twin-screw extruders

OMICRON 12 PHARMA is a co-rotating twin-screw laboratory extruder, specifically designed and developed for the Pharmaceutical industry. The ability of this HOT MELT EXTRUSION SYSTEM is to generate outstanding dispersive and distributive mixing. It can produce material at an extremely low output rate, which helps in lowering the cost of development of new products. OMICRON 12 PHARMA offers the widest flexibility available in today's market for Research & Development projects with the ability to be customized for any given application.

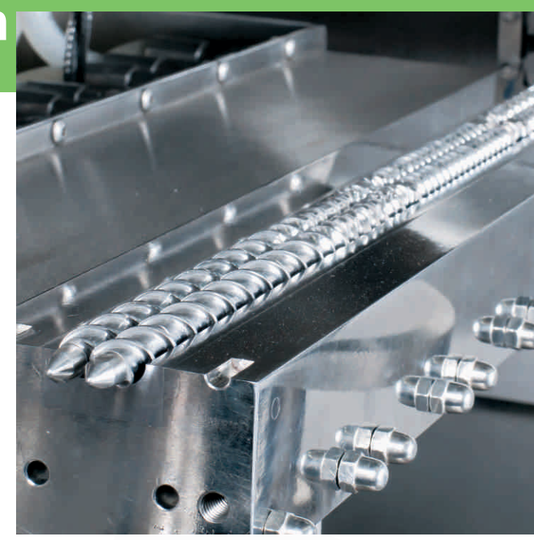

STEER GENERATION NEXT
CO-ROTATING TWIN-SCREW EXTRUDERS

features

- Minimum quantity -40gm
- Flexibility of feeding in any zone / liquid injection
- Modular/configurable screw elements
- Length - 42 D
- 8 Heating and cooling zones with vent ports o Barrel Liner - SSX15 TN
- STEER EPZ Products

advantages

- Easy cleaning and changeover
- Low material loss
- Inline process control
- Easy scale up
- Processing of temperature sensitive API

applications

- Hot Melt Extrusion formulations
- Research & Development projects

STEER

H.M.E.S.

pilot & full scale production

STEER H.M.E.S. omega 20 P

FOR PHARMACEUTICAL PILOT PRODUCTION

STEER H.M.E.S. omega 30 P

FOR PHARMACEUTICAL REGULAR PRODUCTION

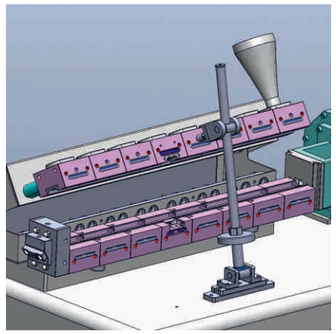

CLAMSHELL BARREL

STEER Clamshell barrel provides easy access to the Screw elements and reduces the cleaning time of the barrels and elements. This in turn reduces the change overtime and hence the formulation changing in STEER extruder is much more simple and effective.

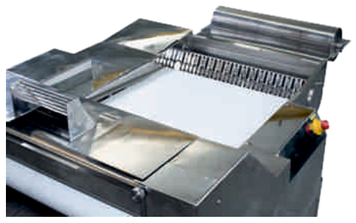

CHILL ROLL OUT ZONE

STEER HMES

omega 20 P

key features

advantages

applications

STEER HMES OMEGA 20 is the most suitable pilot scale extruder for Scale-up studies, Exhibit / Clinical batches. OMEGA 20 is designed to comply with GMP requirements of automation, contact surface and cleaning.

- Pilot Scale
- Conforms to GMP
- Option of Clam Shell and Segmented Jiffy Clamp Barrel Design
- Upstream: Split/ Side Feeding
- Downstream: Chill Roll Unit, Cool Air Conveyor, and Pelletizer
- Liquid/Gas injection
- Skid mounted
- Degassing

- Scalability
- Process Flexibility
- Easy Cleaning and dismantling
- Inline Process Control (PAT)
- Better mixing capability
- Shorter residence time
- Reliable data logging

- Exhibit batches
- Clinical batches
- Scale-up studies
- Solid Molecular dispersions
- Bio-availability Enhancement
- Taste Masking
- Sustained Release

SEGMENTED JIFFY CLAMP BARREL

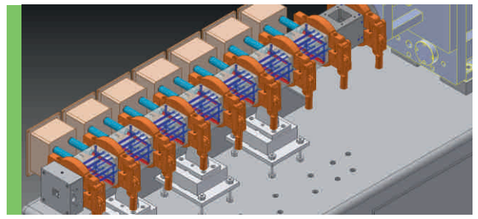

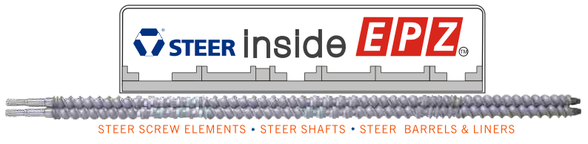

STEER the global leader in EPZ Products like Screw elements, Shafts and Barrels provide a host of services including replacement of screws

The Extruder Processing Zone (EPZ) is the 'heart' of a Co-rotating Twin-Screw Extruder that helps to achieve the desired performance. STEER screw elements ensure a fully wiping profile for any lead of screw, any number of starts and any machine parameter.

STEER's OMEGA PHARMA twin-screw extruder created for pharmaceutical applications is modular in design. The HOT MELT EXTRUSION SYSTEM consists of co-rotating fully wiping twin-screws and clamshell barrel. The key tasks of the extruder are mixing, homogenizing and degassing. Its modular design offers a choice of screw elements which allow altering the configuration of the intake, mixing and metering zones with respect to different applications. Flexibility, continuous operation process capability and higher energy efficiency make the OMEGA PHARMA HOT MELT EXTRUSION SYSTEM the ideal Pharma extruder.

STEER HMES

omega 30 P

key features

- Conforms to GMP standards
- Clamshell or Segmented Barrel Jiffy Clamp design for easy cleaning
- Precise temperature control
- Custom upstream: Split/Side feeding, Refill Silos, Platforms
- Application based custom downstream: Chill Roll, Cool Air Conveyor, and Pelletizer
- Complete Validation support
- 21 CFR part 11 compliance

advantages

- High Throughput
- Plant engineering support
- Easy Cleaning and dismantling
- Inline Process Control (PAT)
- Better mixing capability
- Shorter residence time
- Reliable data logging

applications

- Hot Melt extrusion formulations
- Solid Molecular dispersions
- Bio-availability Enhancement
- Taste Masking
- Sustained Release

STEER HMES

omega 40 P

STEER's OMEGA PHARMA twin-screw extruder created for pharmaceutical applications is modular in design. The HOT MELT EXTRUSION SYSTEM consists of co-rotating fully wiping twin-screws and clamshell barrel. The key tasks of the extruder are mixing, homogenizing and degassing. Its modular design offers a choice of screw elements which allow altering the configuration of the intake, mixing and metering zones with respect to different applications. Flexibility, continuous operation process capability and higher energy efficiency make the OMEGA PHARMA HOT MELT EXTRUSION SYSTEM the ideal Pharma extruder.

key features

- Conforms to GMP standards
- Clamshell or Segmented Barrel Jiffy Clamp design for easy cleaning
- Precise temperature control
- Custom upstream: Split/Side feeding, Refill Silos, Platforms
- Application based custom downstream: Chill Roll, Cool Air Conveyor, and Pelletizer
- Complete Validation support
- 21 CFR part 11 compliance

advantages

- High Throughput
- Plant engineering support
- Easy Cleaning and dismantling
- Inline Process Control (PAT)
- Better mixing capability
- Shorter residence time
- Reliable data logging

applications

- Hot Melt extrusion formulations
- Solid Molecular dispersions
- Bio-availability Enhancement
- Taste Masking
- Sustained Release

STEER

HMES

chill roll unit

CHILL ROLL WITH INTEGRATED FLAKER IS RATED FOR A CAPACITY OF 0.2-50 KG/HR

STEER offers multiple sizes of chill roll units for the pharmaceutical industry with capacity ratings from as low as 0.2 kg/hr up to 50 kg/hr, all constructed to cGMP standards. These units are designed to accept molten excepient/API produced by hot melt extrusion (HME) or other sources and quick chill the excipient in order to preserve crystalline active ingredients in an amorphous state for enhanced bioavailability. A film is formed on the upper roll and immediately chilled and deposited onto a conveyer belt below the chill roll where it is transported to a flaker or granulator for size reduction.

STEER

HMES

chill roll unit

capacity of 2 – 15 kg/hr
and has an integrated flaker

features of operation

- Hot excipient /API is metered onto the upper feed roll
- The feed roll are maintained at a desired temperature using a temperature control unit
- The speed of the rolls and conveyor belt are synchronized, no need of individual control
- Speed of the drive hardware can be varied from 0 to 2750 mm/min (110 in/min)
- The gap between the chill rolls can be adjusted from 0.5mm to 3mm in width depending on product requirements
- Wiping blades scrap the product film off of the chill roll in large flakes
- The flakes fall to the conveying belt for transport to the flaker
- The tension of the conveying belt is adjustable
- The conveyor belt mounting cartridge provides easy access to remove and replace belts between product types
- Product is transported off of the end of the conveyor and dropped into a rotating flaker
- The flaker speed is independently controlled and can be adjusted to provided the desired product consistency

specifications

- Modular in design, easy to relocate for storage or other uses
- Construction to cGMP standards
- 316 stainless steel construction for contact surfaces
- 304 stainless steel construction for non-contact surfaces
- Integrated flaker included on larger units, optional granulater on smaller units
- Food grade polyurethane conveyor belt
- Cartridge style conveyor mount for quick and easy belt replacement
- PLC based integrated controls can be mounted remotely or on the unit
- Numerous features and control interlocks for safe, reliable performance

capacity of 0.2 – 2 kg/hr
and is offered with an optional granulator

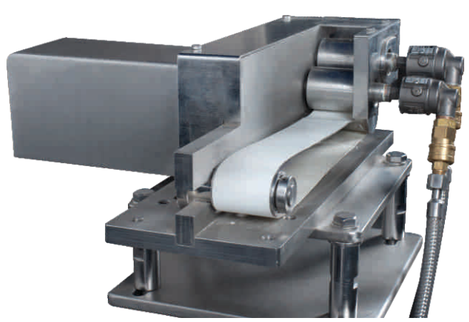

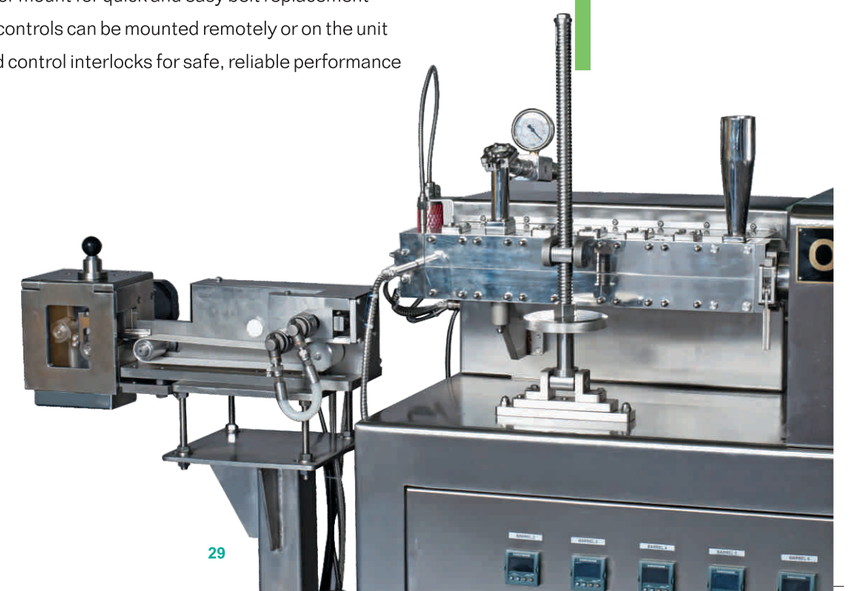

STEER HMES

Specifications Of Various Models

Machine	Application	Do/Di	L/D	Output*	Min Batch Quantity	Barrel Diameter D(mm)	Screw Outside "Do" dia	Screw Inside dia " d " (mm)	Diameter Ratio "D/d" (mm)	Max .Drive power (KW)	Maz screw Speed (rpm)	Nomial Torque (T2) Nm	Specific Torque (Nm/Cm3)	L/D Free Vol (cc)	Length (mm)	width (mm)	Height(mm)	Weight (Kg)
Omicron 10 P	R&D	1.71	24	200 – 500 gm/h	20gm	11	10.7	6.25	1.71	0.9 Kw	800	3 Nm	4.7 Nm	19.51	720	500	310	300
		1.55				10.5	10.25	6.6	1.55									
		1.42				10	9.7	6.8	1.42									
		1.27				10	9.5	7.5	1.27									
Omicron 12 P	R&D	1.71	42	500 – 2000 g /hrs	50gm	13.2	12.9	7.54	1.71	3	1200	15	13	37	1250	600	1500	400
Omega 20 P	Pilot or Commercial scale	1.71	40	10 – 20 kg/hrs	500g	20	19.6	11.6	1.72	7.5	1200	60	14.6	220	2300	800	1500	1050
Omega 30 P	Commercial Scale	1.71	40	20 – 30 kg /hr	NA	30	29.7	17.3	1.73	30	1200	120	8.7	708.46	3800	1500	2000	3500
Omega 40 P	Commercial Scale	1.71	40	40 - 60 kg /hr	NA	40	39.7	23.3	1.71	45	1200	179	5.46	1651.61	3840	1575	1255	4100

STEER HMES

schematic overview

STEER OMEGA PHARMA TWIN-SCREW EXTRUDERS

/ MODULAR
/ COMPREHENSIVE
/ SCALABLE

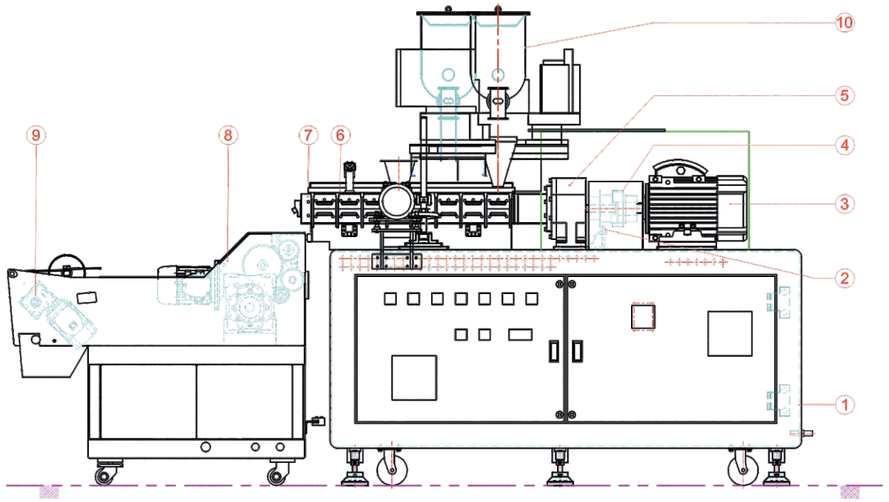

1. MACHINE BASE
2. PROXIMITY SENSOR
3. MOTOR
4. TORQUE LIMITER COUPLING
5. GEARBOX
6. EPZ PARTS
7. DIE ASSEMBLY
8. CHILLER ROLL UNIT
9. FLAKER UNIT
10. GRAVIMETRIC FEEDER

W STEERWORLD.COM
E INFO@STEERWORLD.COM

Global Offices

STEER AMERICA
1525, Corporate Woods Parkway,
Suite 500, Unitown,
Ohio – 44685 USA

T: +1-866-984-1800
F: +1-540-526-9144
E: info@steeramerica.com
www.steeramerica.com

STEER JAPAN
JBSL Kanda Bldg. 8F, 12-2 Kanda-higashimatsushitacho, Chiyoda-ku,
Tokyo 101-0042 JAPAN

T: +81-3-6206-4171
F: +81-3-6206-4161
El: info@steerjapan.com
Web: www.steerjapan.com

STEER INDIA
290, 4th Main, 4th Phase,
Peenya Industrial Area,
Bangalore – 560058.INDIA

T: +91-80-23723309/10
F: +91-80-28391374
E: hmes@steerworld.com
www.hmes.steerworld.com

STEER CHINA
603,Building No.12, 3599#, Qixin Road,
Minhang District , Shanghai,
China 201101

Tel: +86-021-34718598
Fax: +86-021-34718598 ext. 806
E-mail: info.china@steerworld.com
Web: www.scg.steerworld.com

STEER EUROPE

T: +44 2032904949
E: info@steereurope.com
www.steerworld.com

Global Agents & Representatives

THAILAND
Tel: +66-2-916 3800
Fax: +66-2-946 3055
E-mail: wison@world-instrument.com

Tel: +02-634-4980 2
E-mail: suruga@tozai-jpn.co.jp

SOUTH KOREA
ONE International Co., Ltd.
#127, Beobwon-ro, Songpa-gu, Seoul,
KOREA 05386
VALEON Building, Room 804

Tel. : +82 2 448 8301 (Direct)
Fax : +82 2 448 8303
Mobile : +82 10 6402 1801
E-mail : Edward.ryu@oneinternational.kr

MEAAT
Middle East Asia, Africa & Turkey Region
Tel: +971 (4) 8875232
Fax: +971 (4) 8875234
Mob: +971 50 4567422
E-mail: nikhil.tauruscomtrade@gmail.com
nikhil.buch@sppfze.com

POLAND
Tel: +48-22-747-18-65
Fax: +48-22-747-18-65
E-mail: kbrowarek@kmpplastics.com.pl

BRAZIL & ARGENTINA
Tel: +55 11 3186-9080
E-mail: agente@uniflon.com.br

ISRAEL
Tel: +972 4 8533233
Fax: +972 4 8533144
Mob: +972 54 4368273
E-mail: m_inbar@runa.co.il

RUSSIA
Russia, Ukraine & Belarus
Tel: +38 (044) 457-30-88
Mob: +38 (067) 907-60-59
Fax: +31 (0) 76-571-4062
E-mail: valentina.vinogradova@gmail.com
steer.ukraine@gmail.com, v@pi.com.ua

FRANCE
M/s. B2B France
4 ave Jules Ferry,
F-69270 COUZON au Mont d'Or
Contact Person : Jean-Christophe IMBERT

Tel : +(33) 4 78 36 76 71
Cell: +(33) 6 25 06 52 58
W: www.b2bfrance.fr

STEER

• USA • EUROPE • JAPAN • CHINA • INDIA

WWW.STEERWORLD.COM